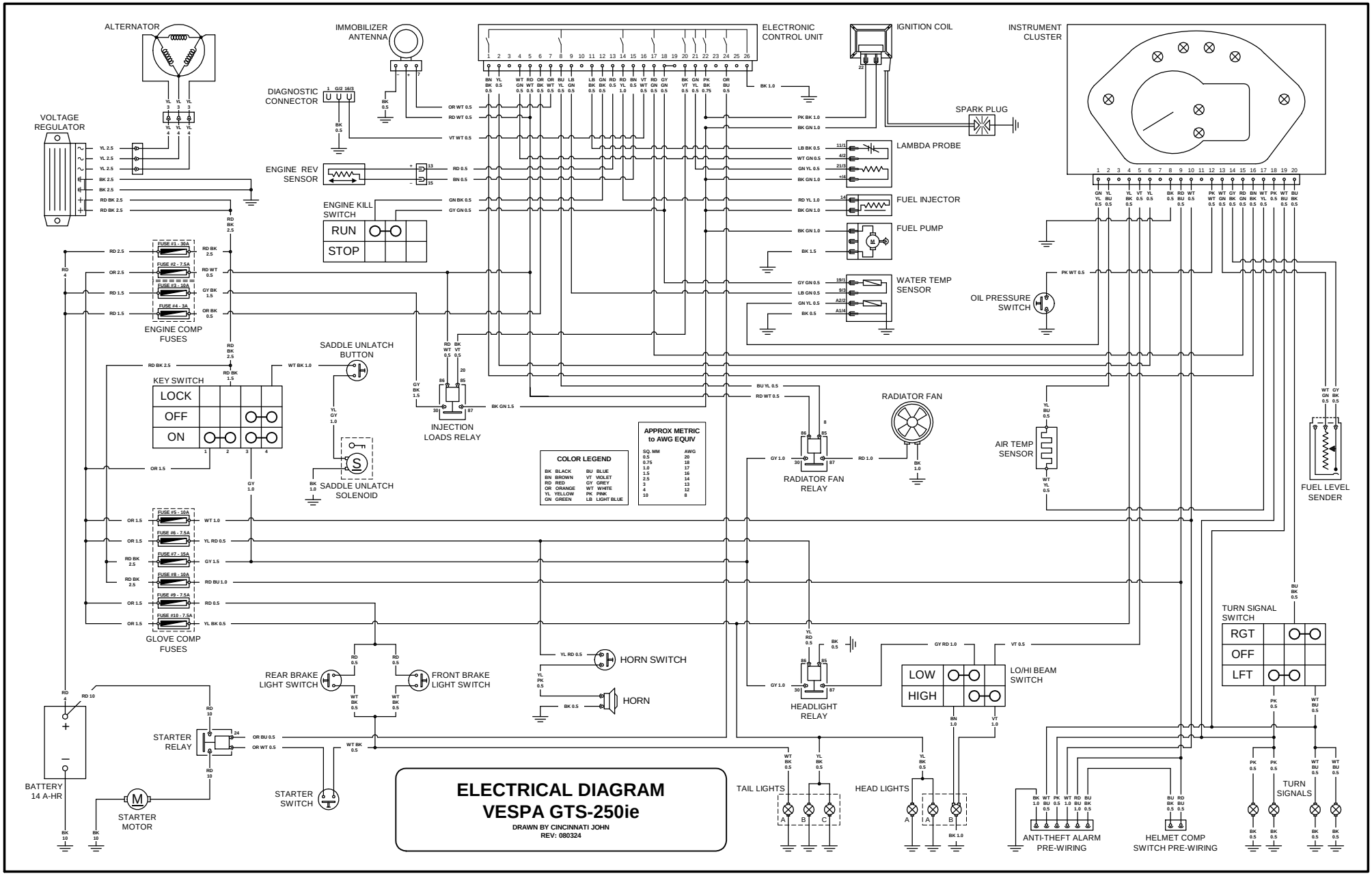
ALTERNATOR
VOLTAGE REGULATOR
IMMOBILIZER ANTENNA
DIAGNOSTIC CONNECTOR
ENGINE REV SENSOR
ENGINE KILL SWITCH
RUN
STOP
ELECTRONIC CONTROL UNIT
IGNITION COIL
INSTRUMENT CLUSTER
SPARK PLUG
LAMBDA PROBE
FUEL INJECTOR
FUEL PUMP
WATER TEMP SENSOR
OIL PRESSURE SWITCH
ENGINE COMP FUSES
FUSE #1 - 30A
FUSE #2 - 7.5A
FUSE #3 - 10A
FUSE #4 - 3A
KEY SWITCH
LOCK
OFF
ON
SADDLE UNLATCH BUTTON
SADDLE UNLATCH SOLENOID
INJECTION LOADS RELAY
RADIATOR FAN
RADIATOR FAN RELAY
AIR TEMP SENSOR
FUEL LEVEL SENDER
GLOVE COMP FUSES
FUSE #5 - 10A
FUSE #6 - 7.5A
FUSE #7 - 15A
FUSE #8 - 10A
FUSE #9 - 7.5A
FUSE #10 - 7.5A
HORN SWITCH
HORN
REAR BRAKE LIGHT SWITCH
FRONT BRAKE LIGHT SWITCH
HEADLIGHT RELAY
LO/HI BEAM SWITCH
LOW
HIGH
TURN SIGNAL SWITCH
RGT
OFF
LFT
BATTERY 14 A-HR
STARTER RELAY
STARTER MOTOR
STARTER SWITCH
TAIL LIGHTS
HEAD LIGHTS
ANTI-THEFT ALARM PRE-WIRING
HELMET COMP SWITCH PRE-WIRING
TURN SIGNALS
COLOR LEGEND
BK BLACK
BN BROWN
RD RED
OR ORANGE
YL YELLOW
GN GREEN
BU BLUE
VT VIOLET
GY GREY
WT WHITE
PK PINK
LB LIGHT BLUE
APPROX METRIC to AWG EQUIV
SQ. MM AWG
0.5 20
0.75 18
1.0 17
1.5 16
2.5 14
3 13
4 12
10 8
ELECTRICAL DIAGRAM
VESPA GTS-250ie
DRAWN BY CINCINNATI JOHN
REV: 080324